(1:1)

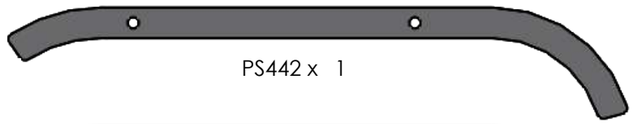
PS442 x 1

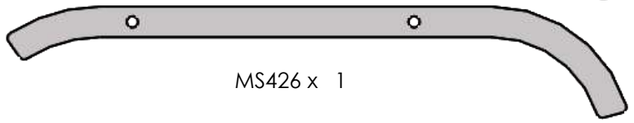
MS426 x 1

MS427 x 1

PS197 x 1

PS198 x 1

MS451 x 1

LR005 x 2

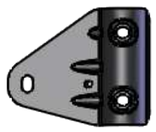
LR006 x 2

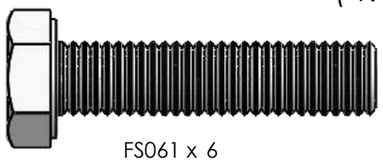
FS061 x 6

FS067 x 12

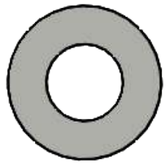
FW021 x 28

FN080 x 10

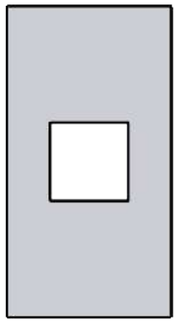
M8 (MS393) x 3

PS414 x 18

PS065 x 4

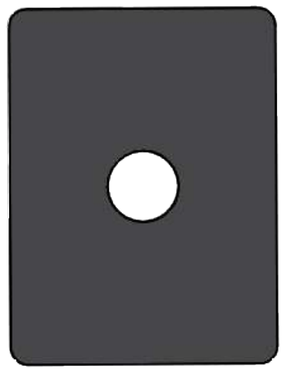
PS020 x 3

PS419 x12

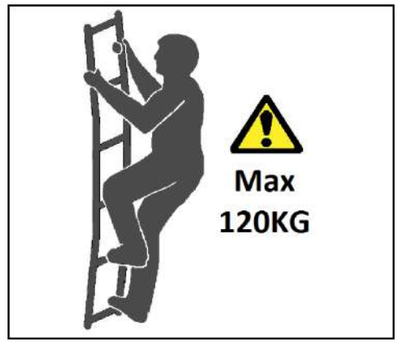

13mm x 2

4mm x 1

9mm x 1

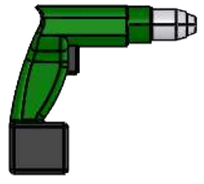

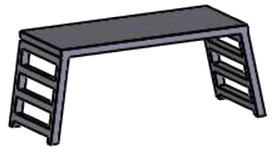

1.

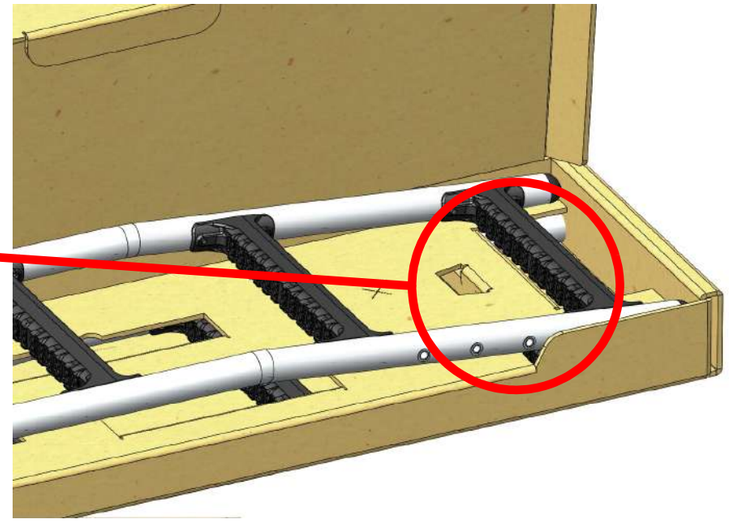

2.

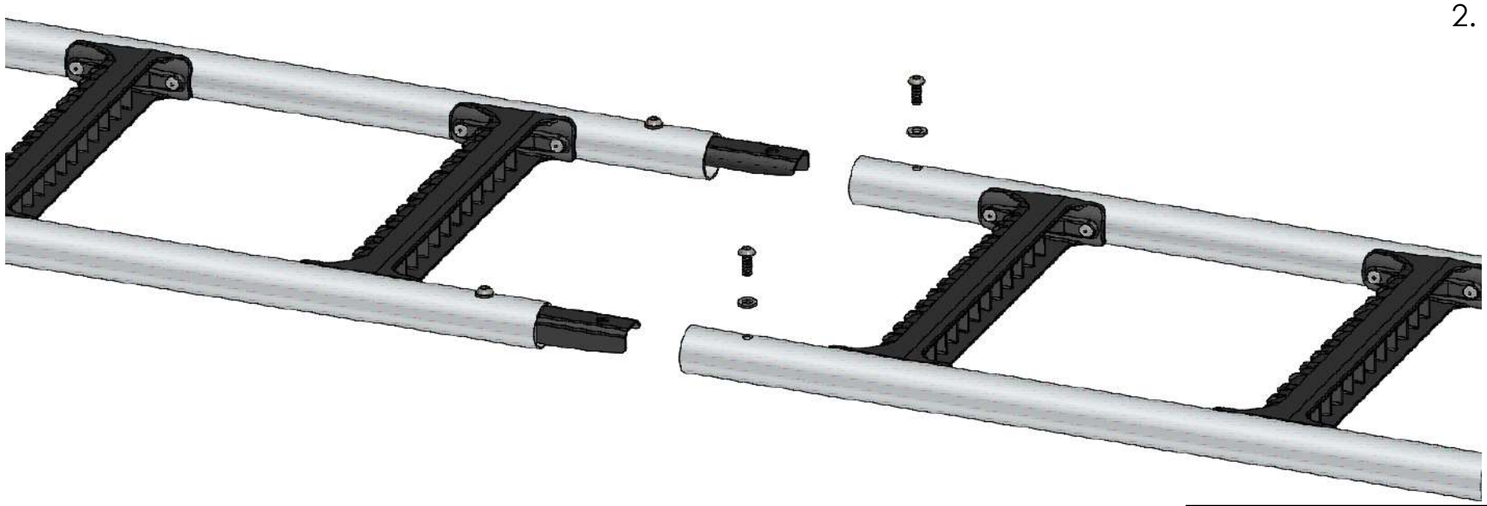

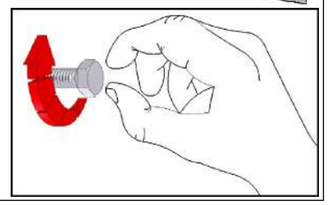

3.

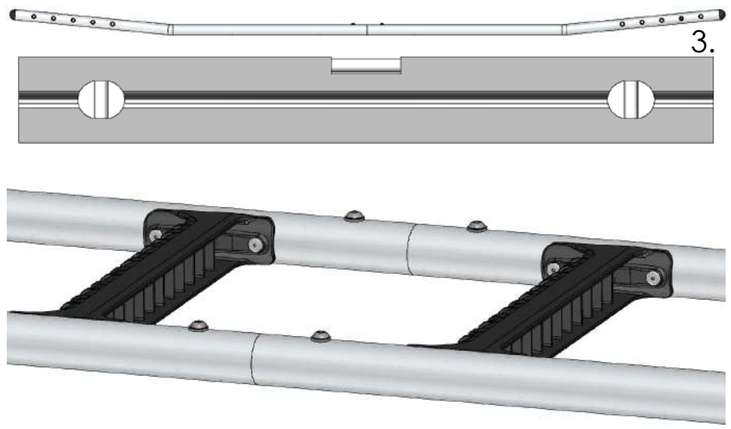

x4

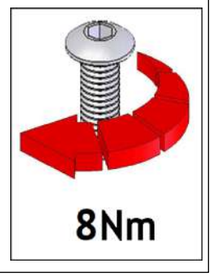

4.

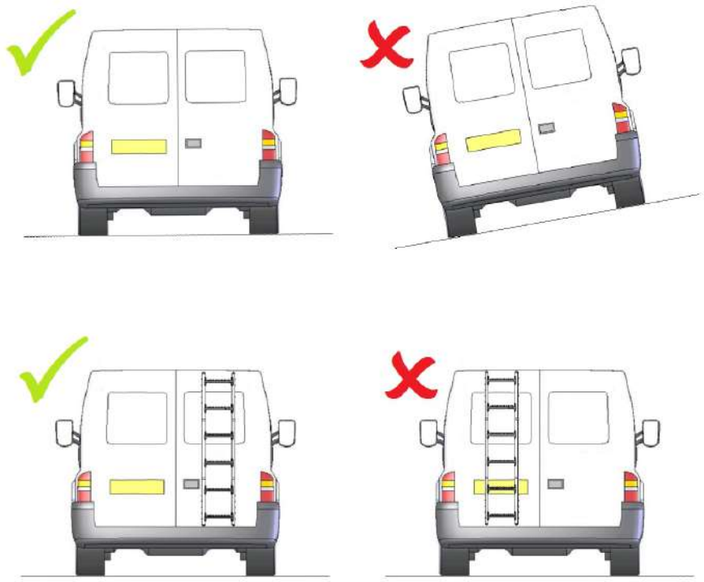

5.

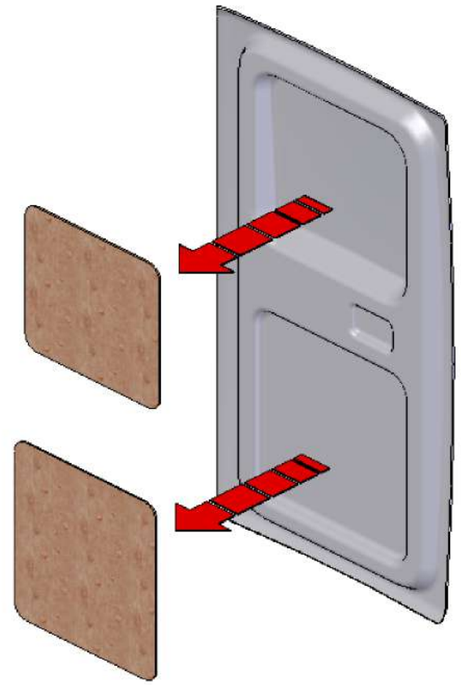

6.

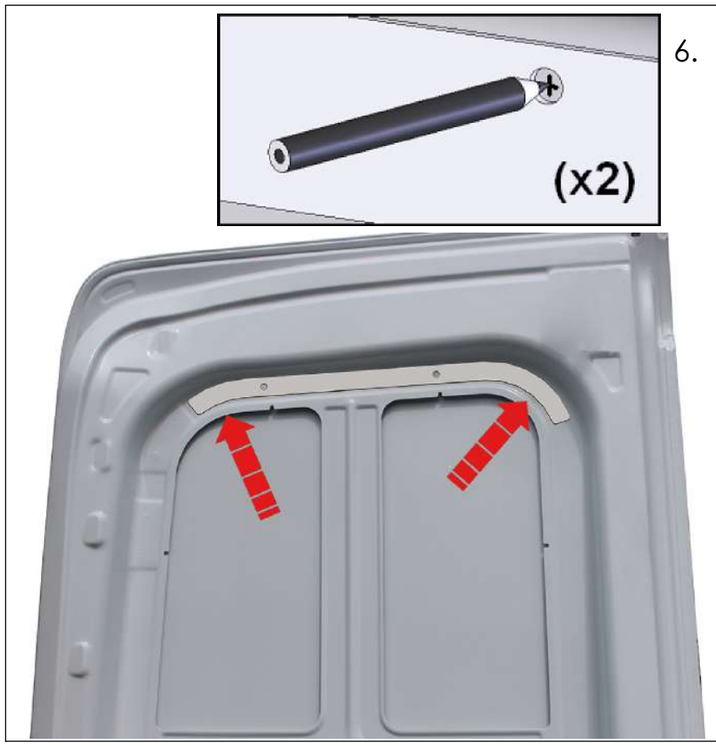

7.

∅4mm (x 2)

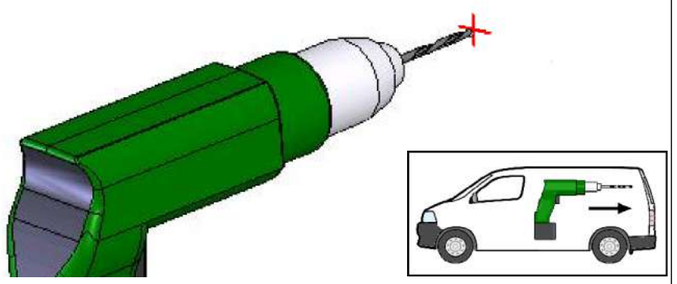

∅9mm (x 2)

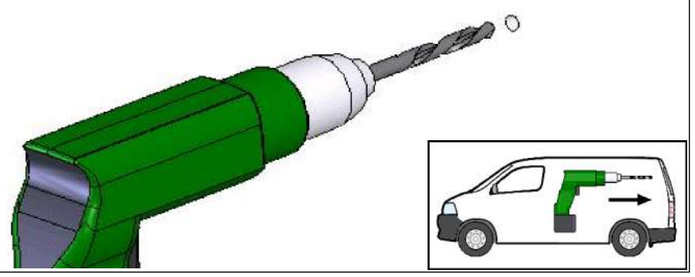

8.

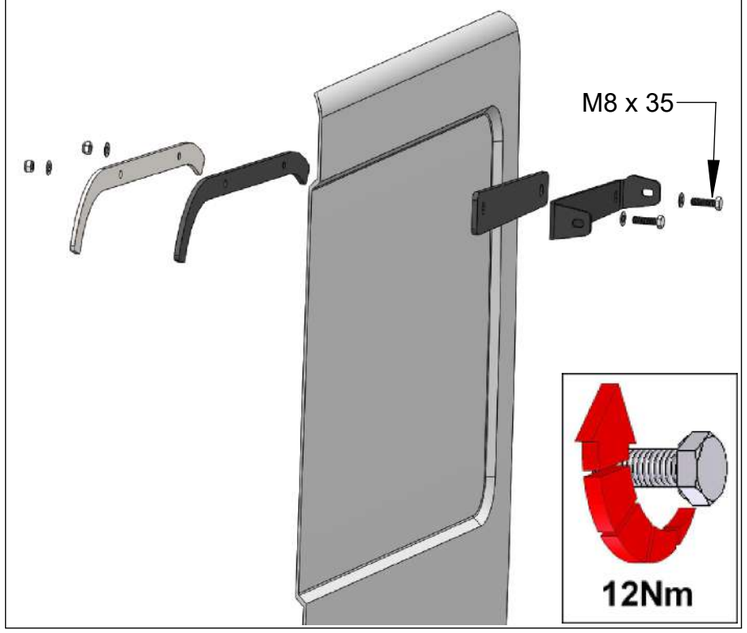

9.

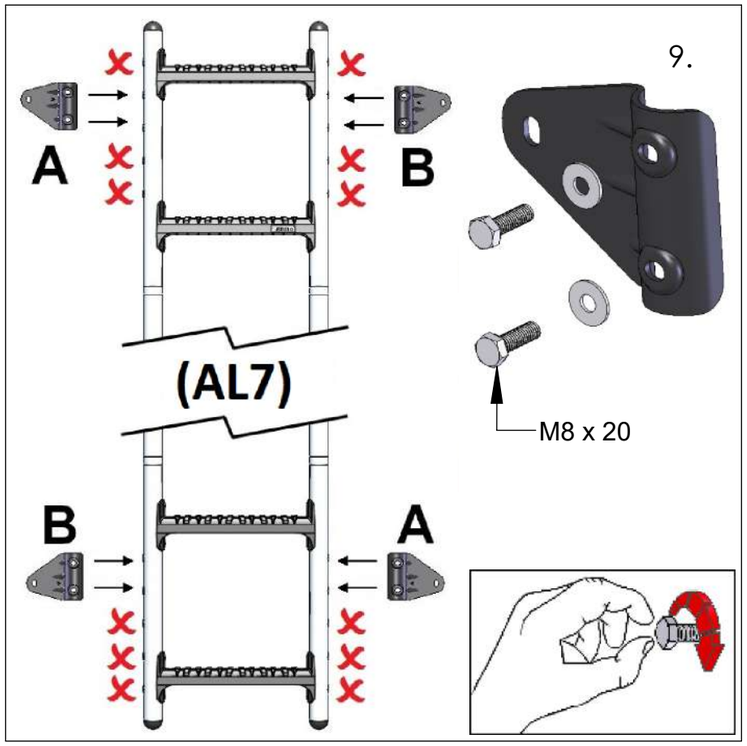

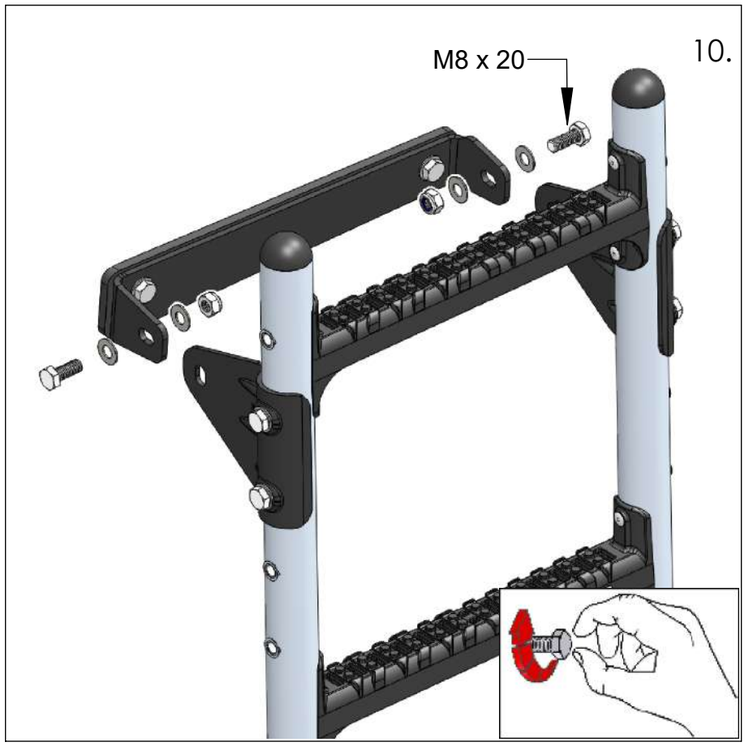
10.
M8 x 20

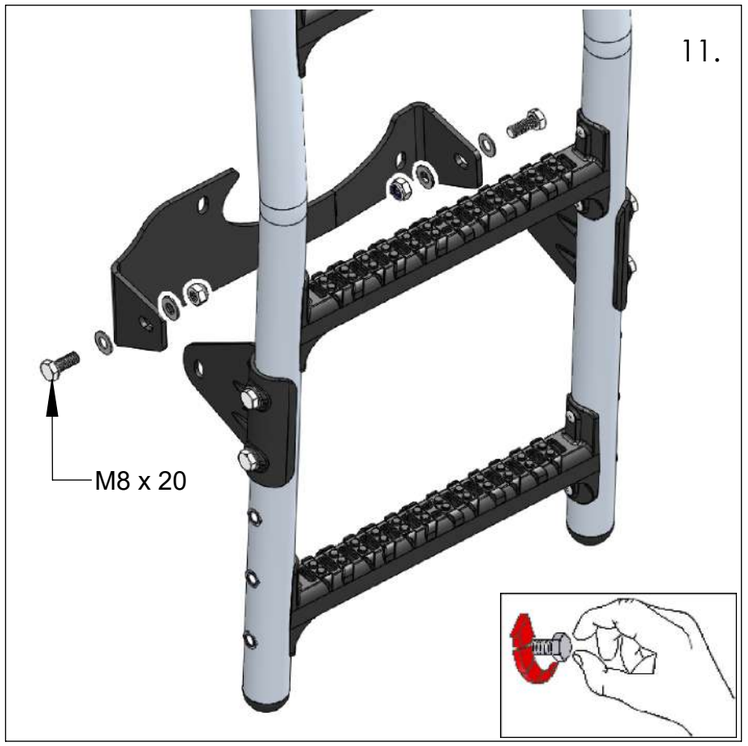
11.
M8 x 20

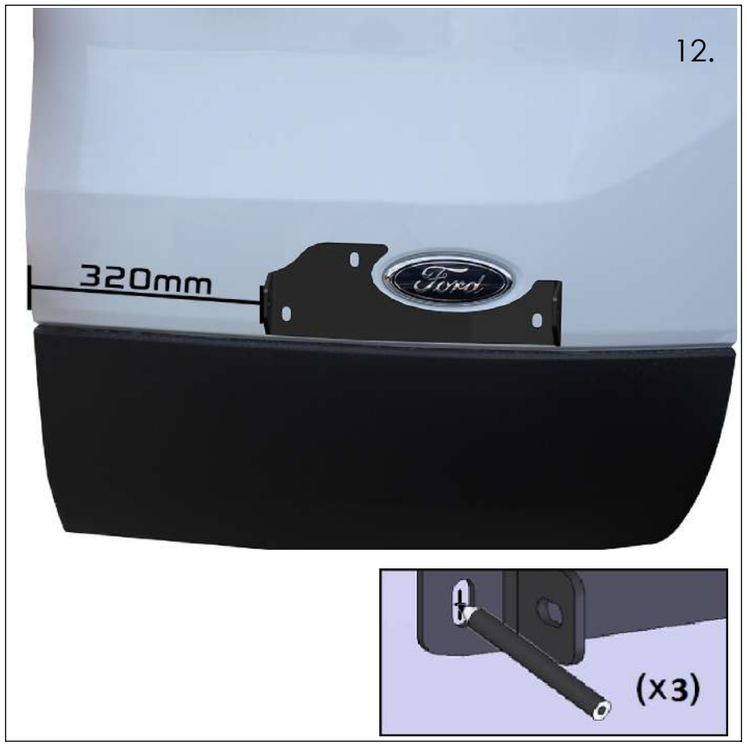
12.
320mm
(x3)

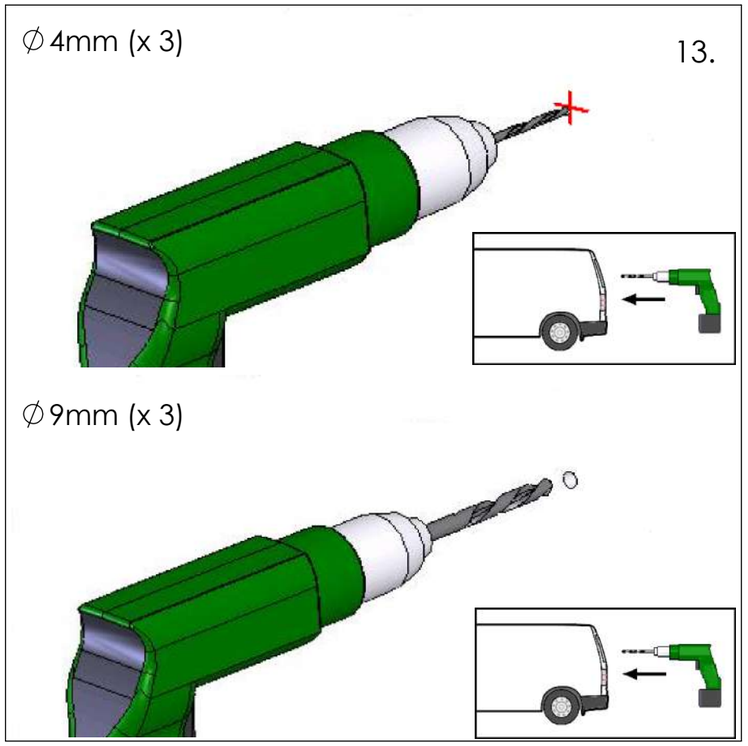
∅4mm (x 3)
13.
∅9mm (x 3)

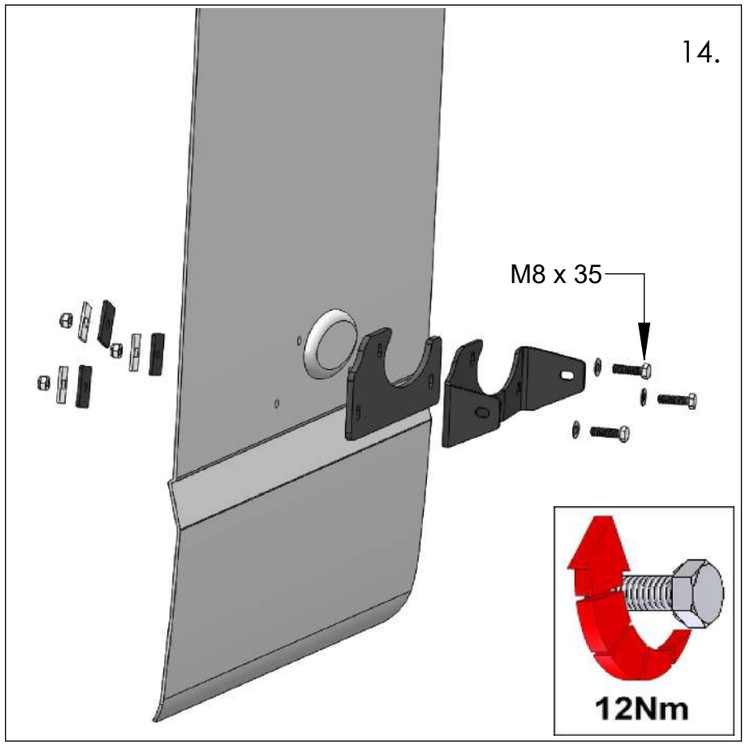
14.
M8 x 35
12Nm

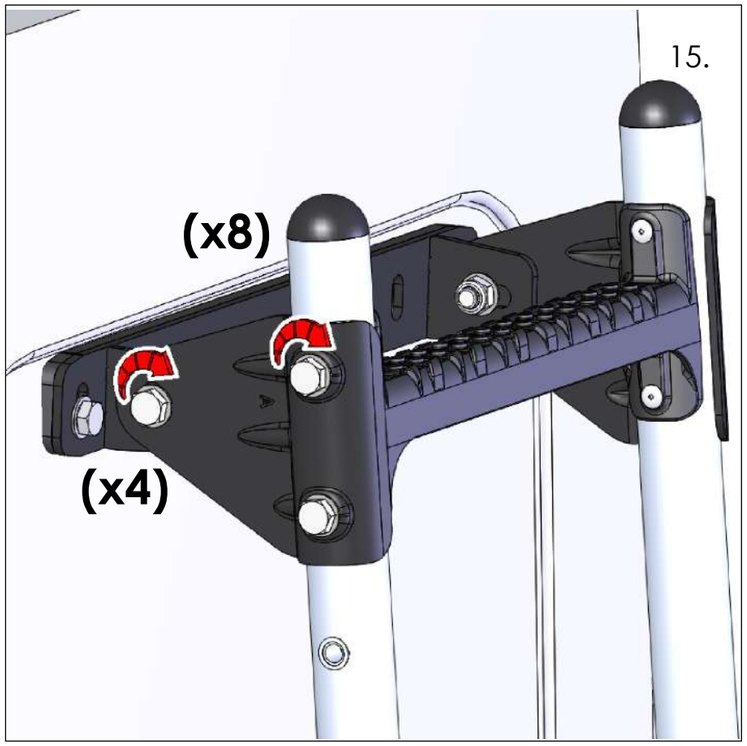
15.
(x8)
(x4)

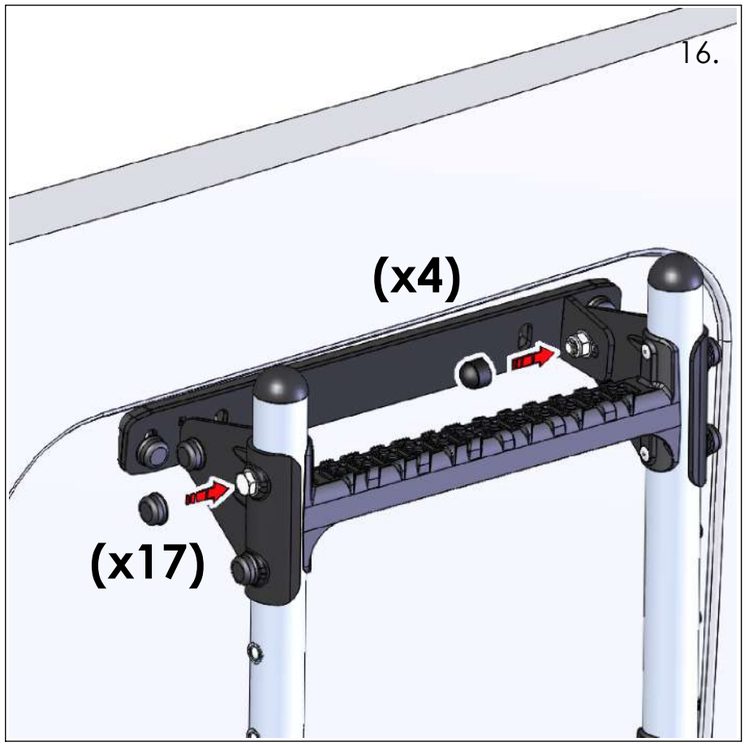
16.
(x4)
(x17)

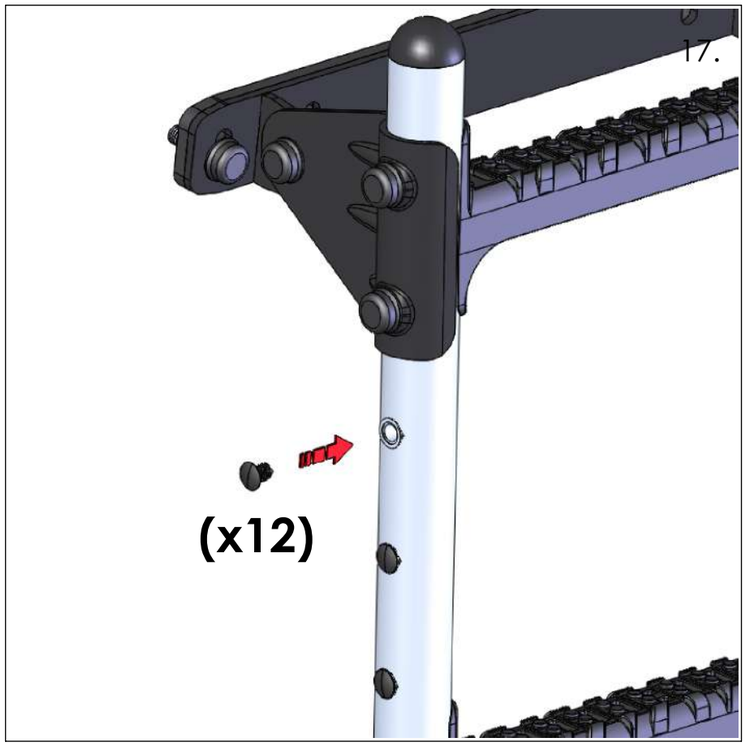
17.
(x12)

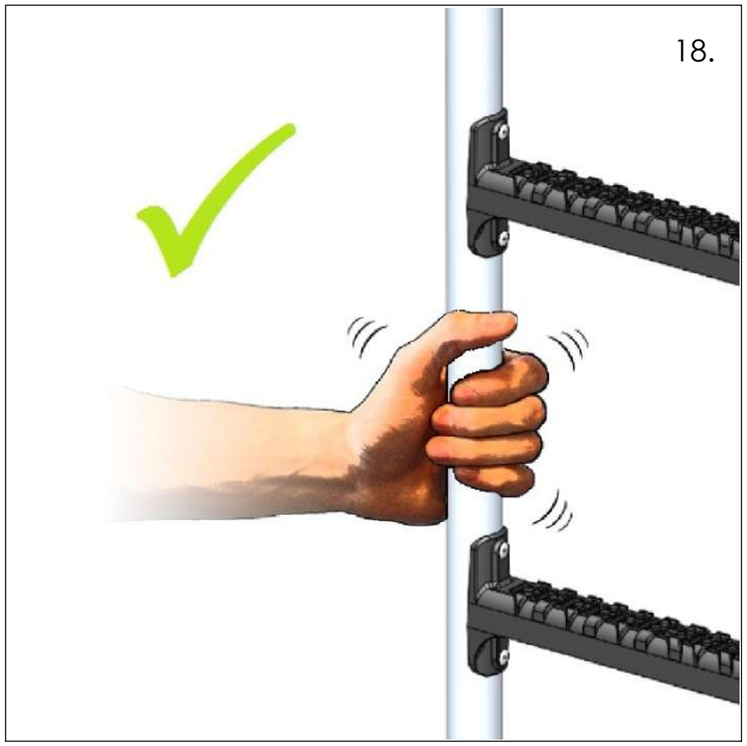
18.