(1:1)

LW004 x 1

PS054 x 1

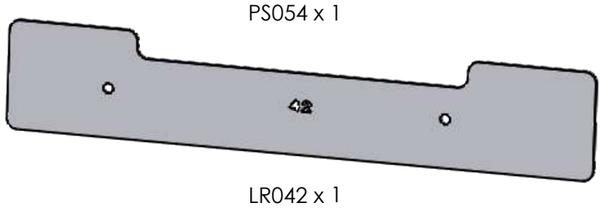
LR042 x 1

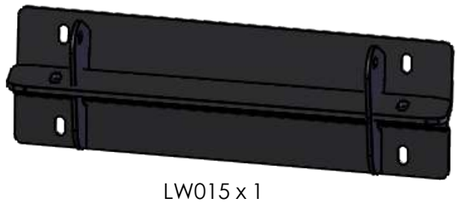
LW015 x 1

PS056 x 2

LR009 x 2

LR005 x 2

LR006 x 2

PS425 x 2

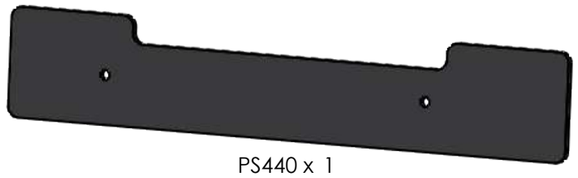
PS440 x 1

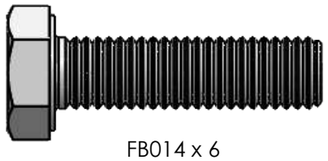
FB014 x 6

FS067 x 12

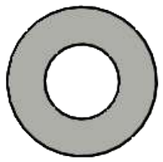
FW021 x 28

FN080 x 10

PS414 x 18

PS065 x 4

PS419 x 12

FS024 x 2

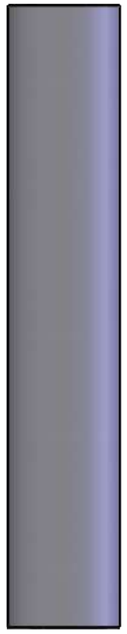
LR045 x 2

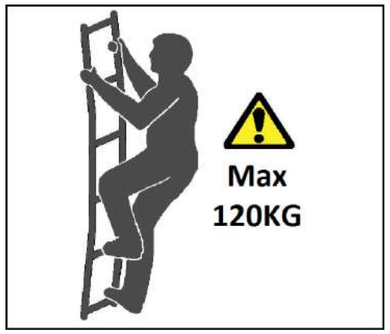

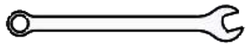
2x 13mm Spanner

1x 4mm drill

1x 9mm drill

1x 13mm drill

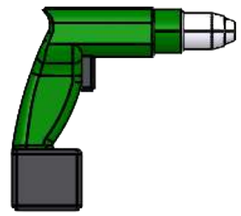

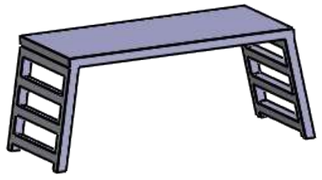

1.

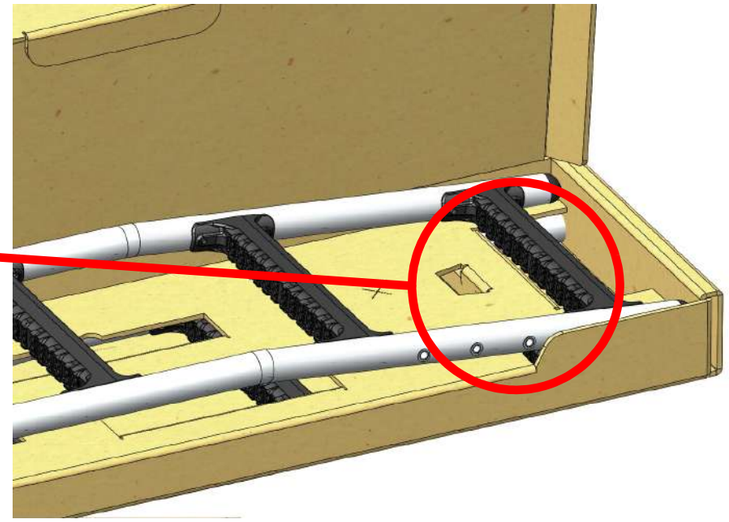

2.

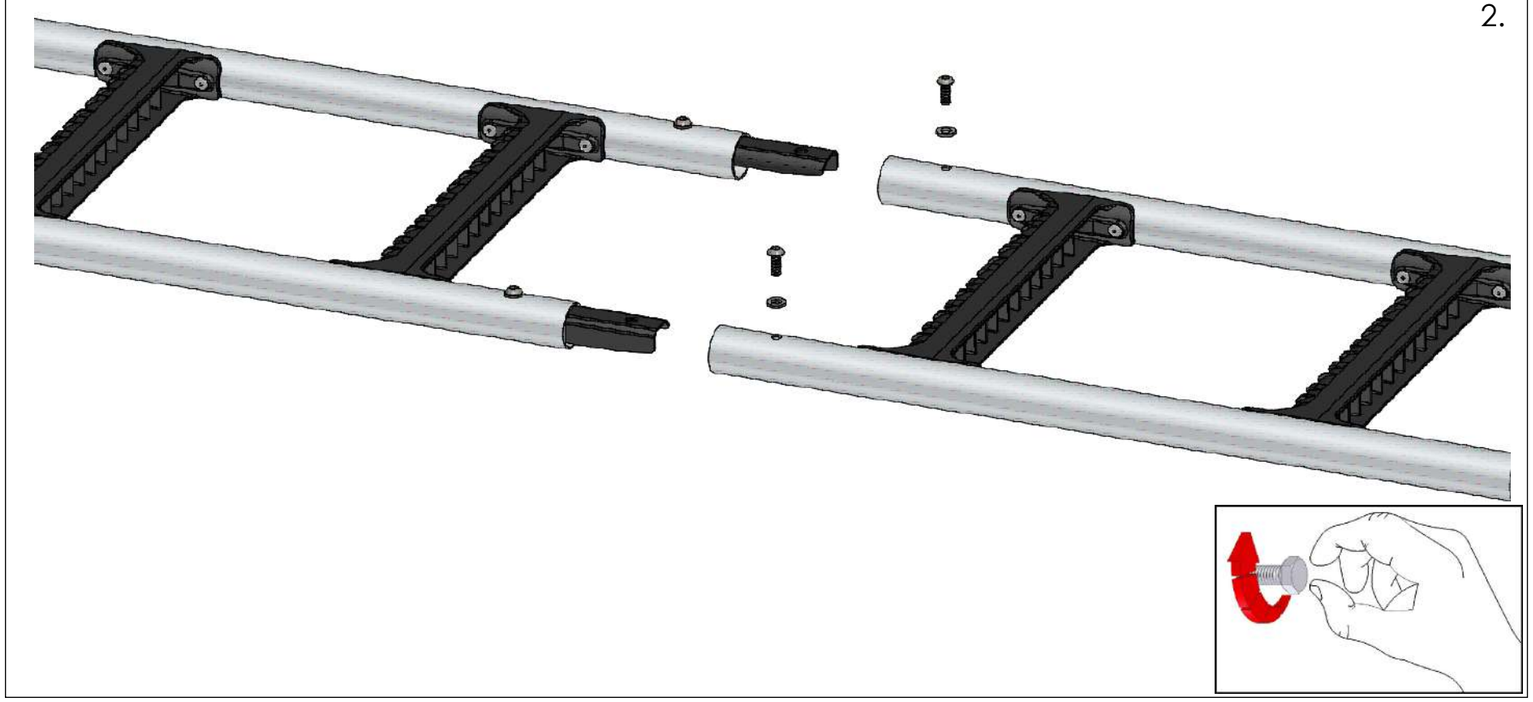

3.

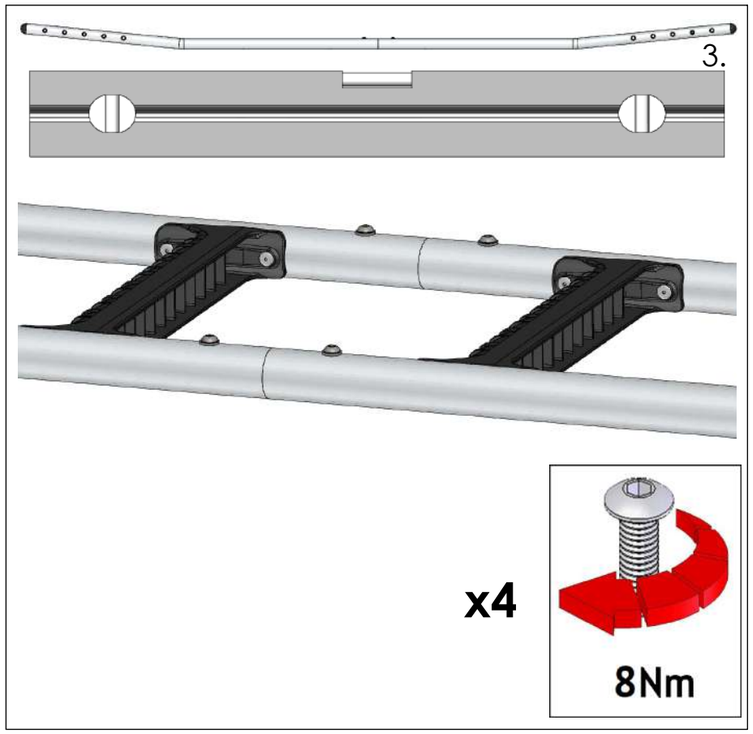

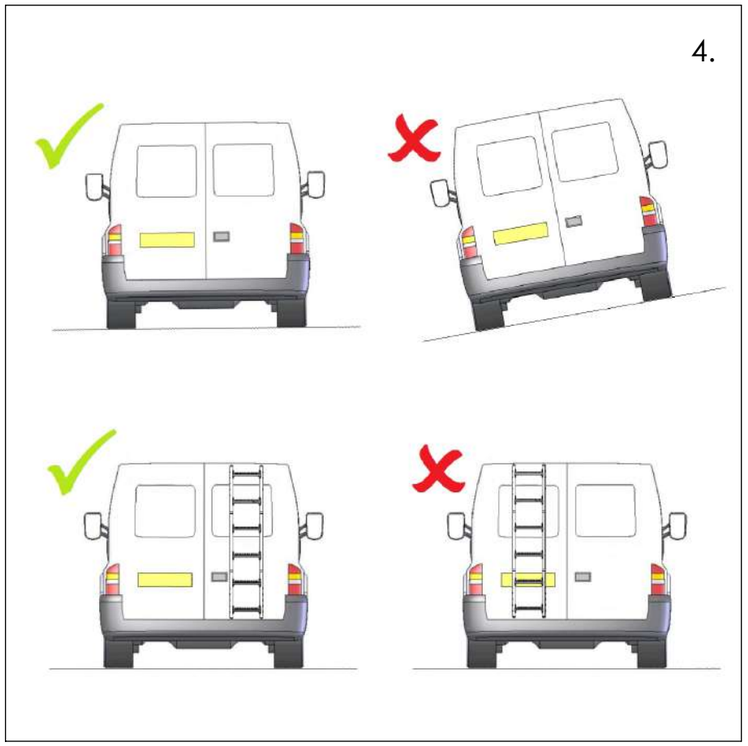
4.

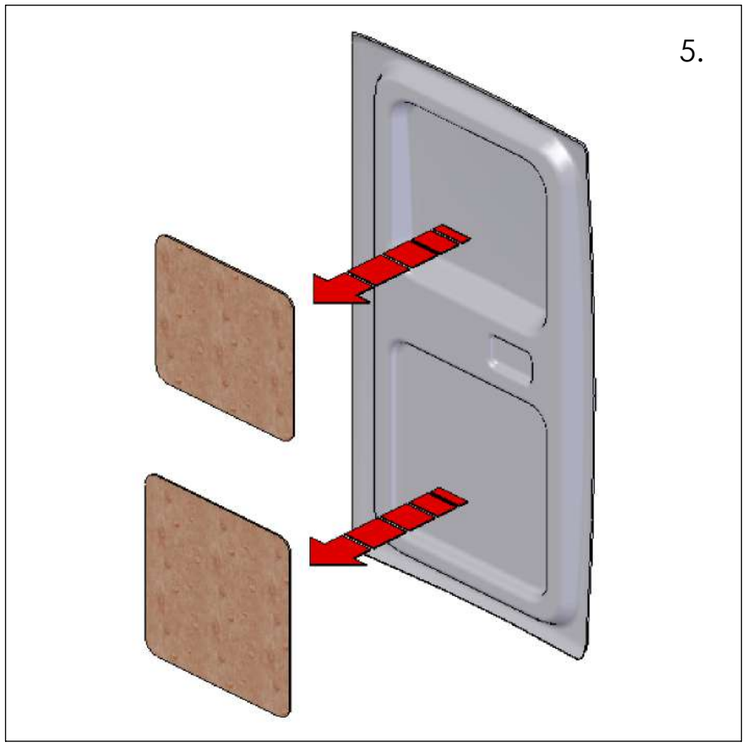
5.

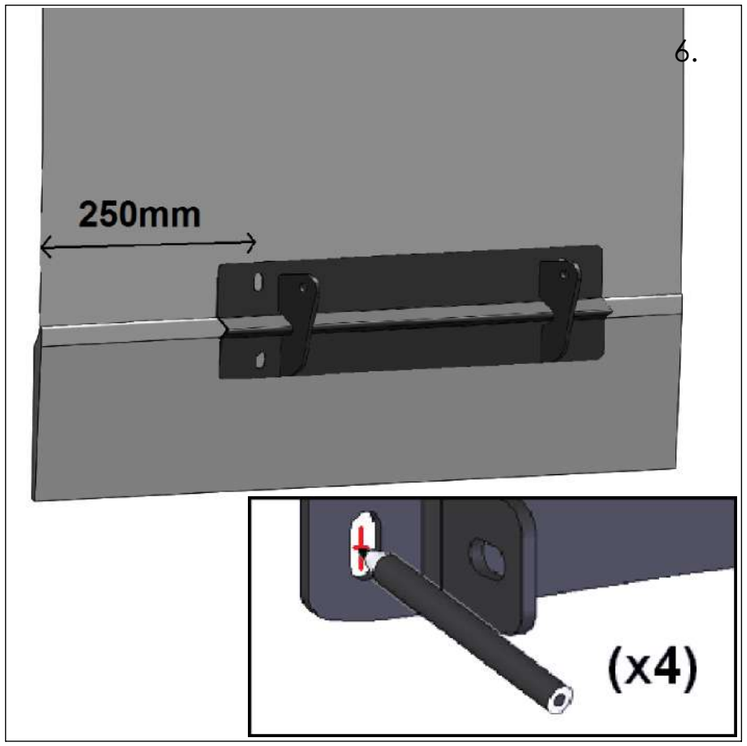
6.
250mm
(x4)

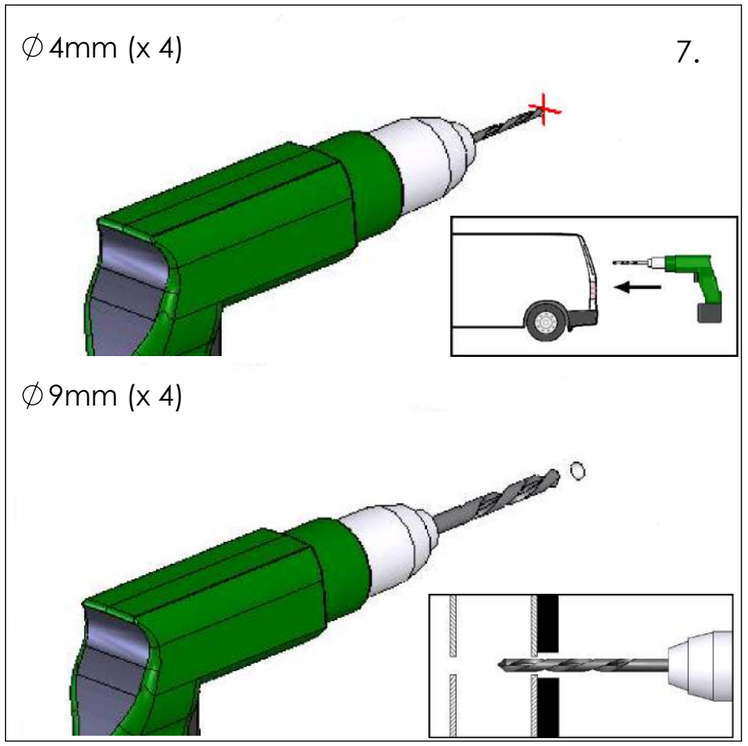
∅4mm (x 4)
7.
∅9mm (x 4)

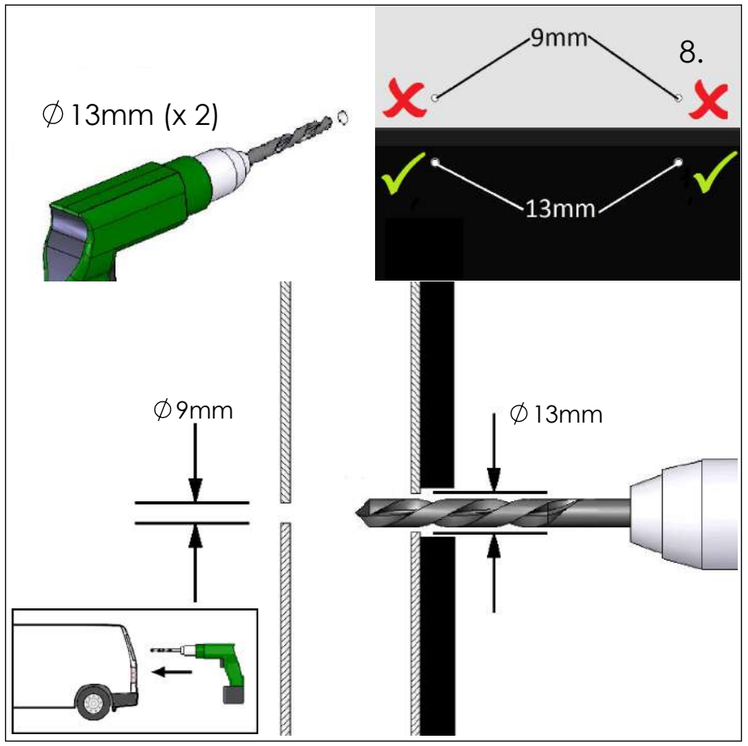
9mm
8.
∅13mm (x 2)
13mm
∅9mm
∅13mm

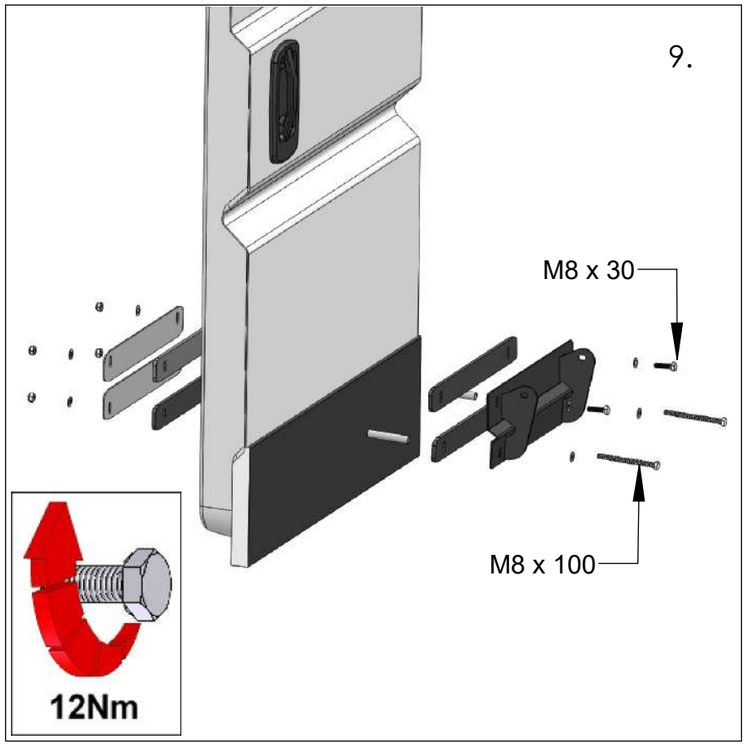
9.
M8 x 30
M8 x 100
12Nm

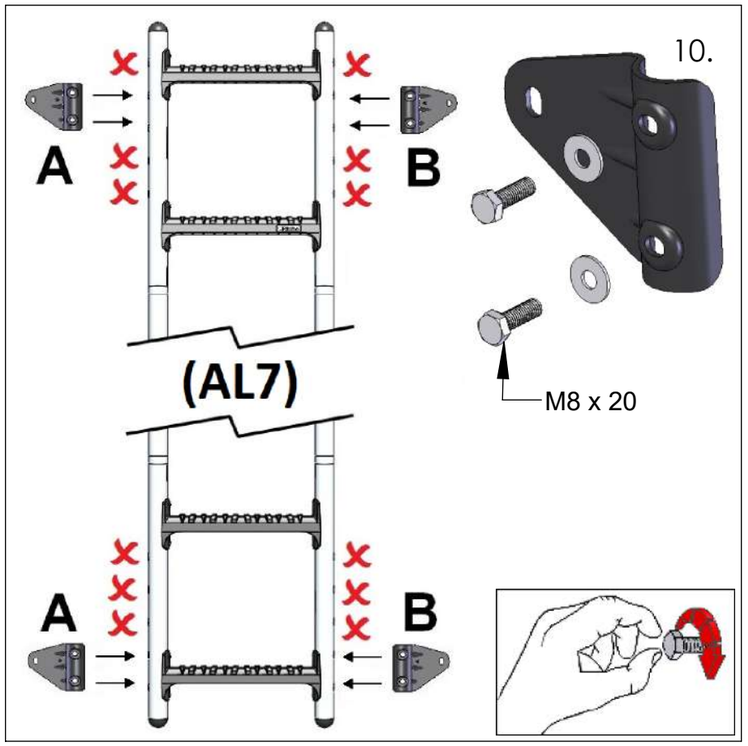
10.
A
B
(AL7)
M8 x 20
A
B

11.
M8 x 20

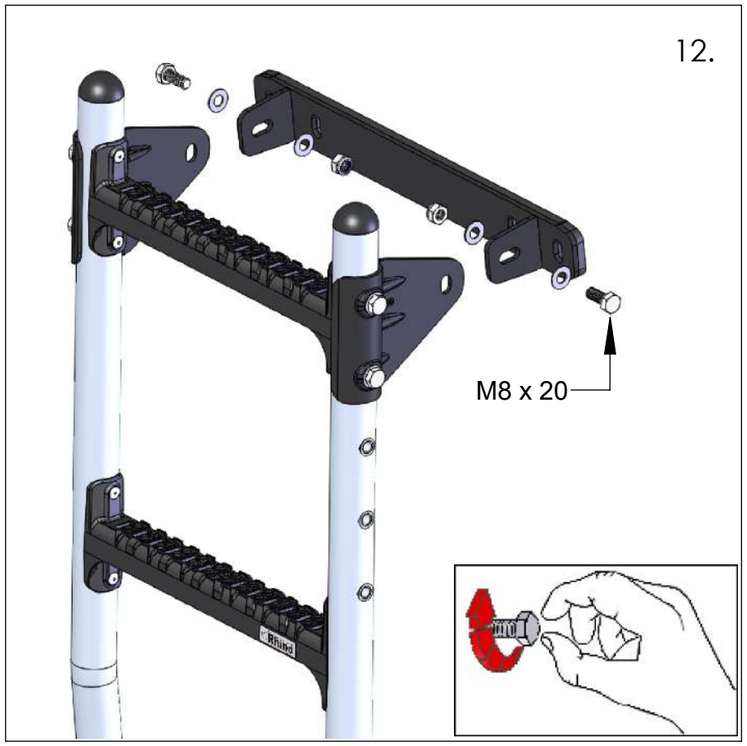
12.
M8 x 20

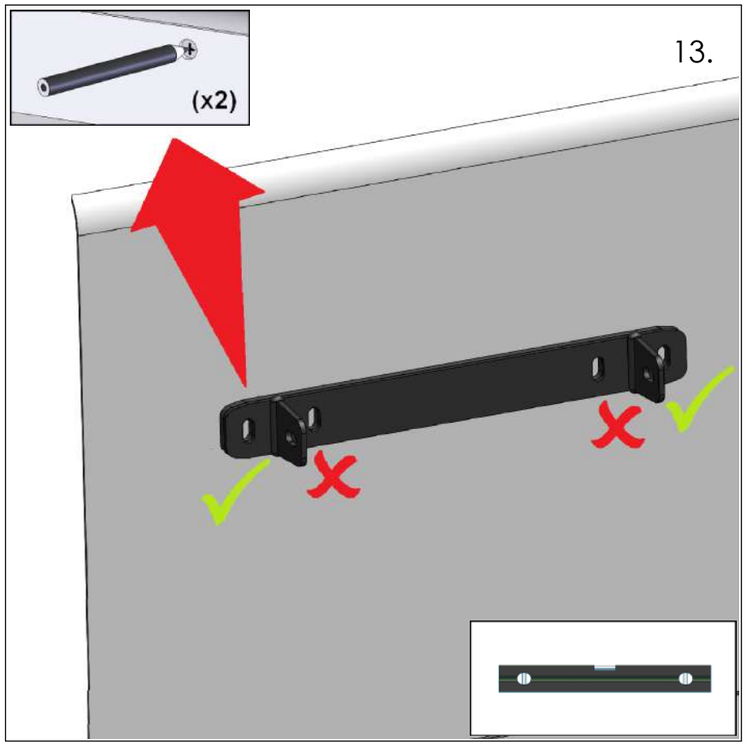
13.
(x2)

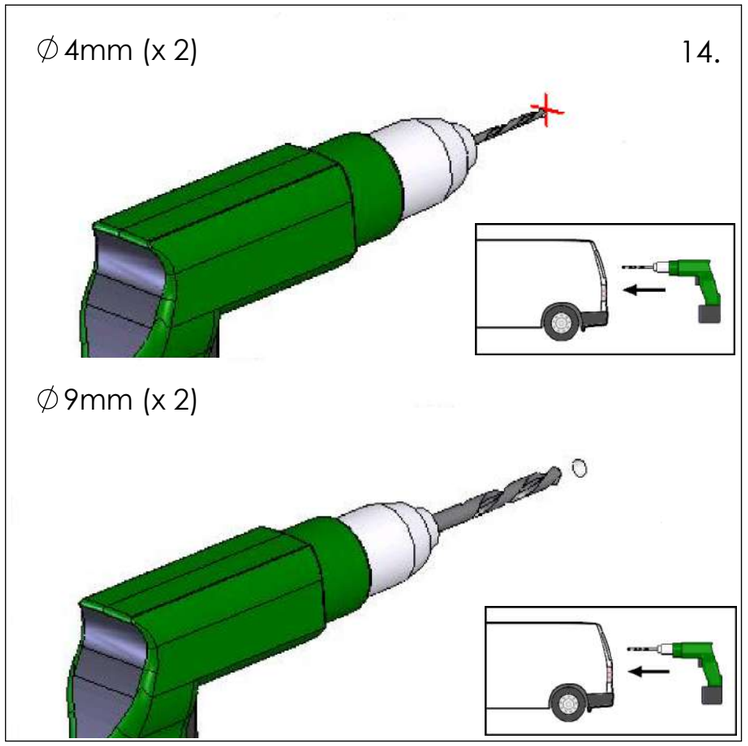
∅4mm (x 2)
14.
∅9mm (x 2)

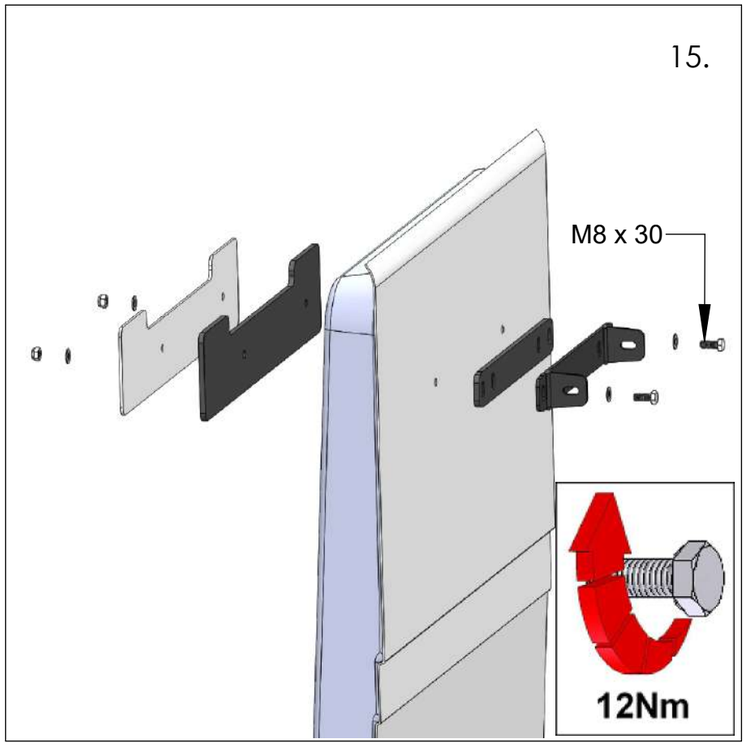
15.
M8 x 30
12Nm

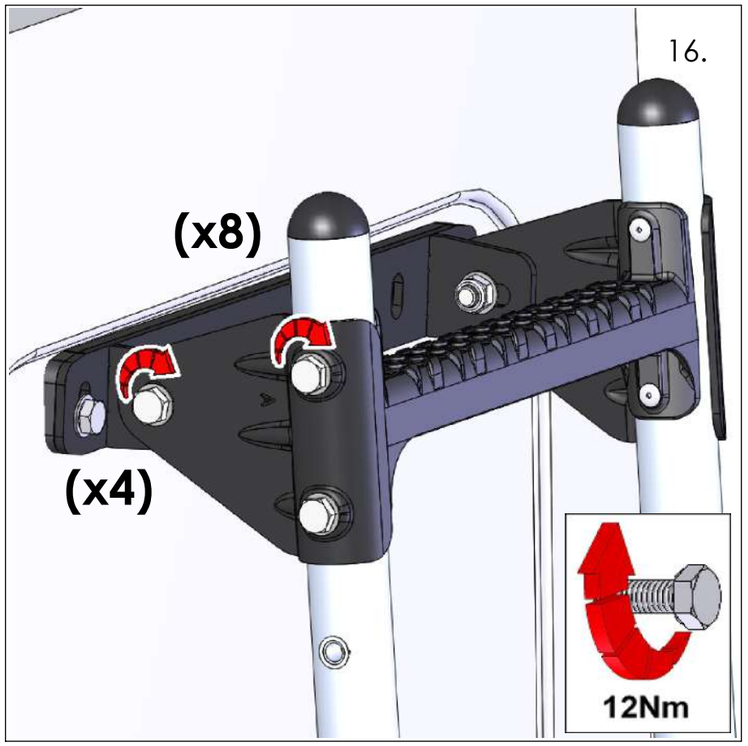
16.
(x8)
(x4)
12Nm

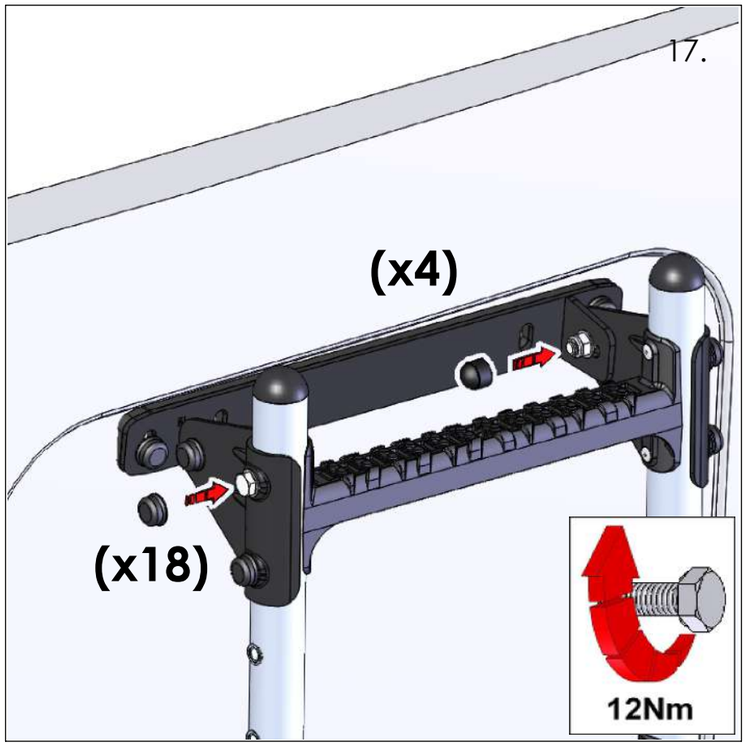
17.
(x4)
(x18)
12Nm

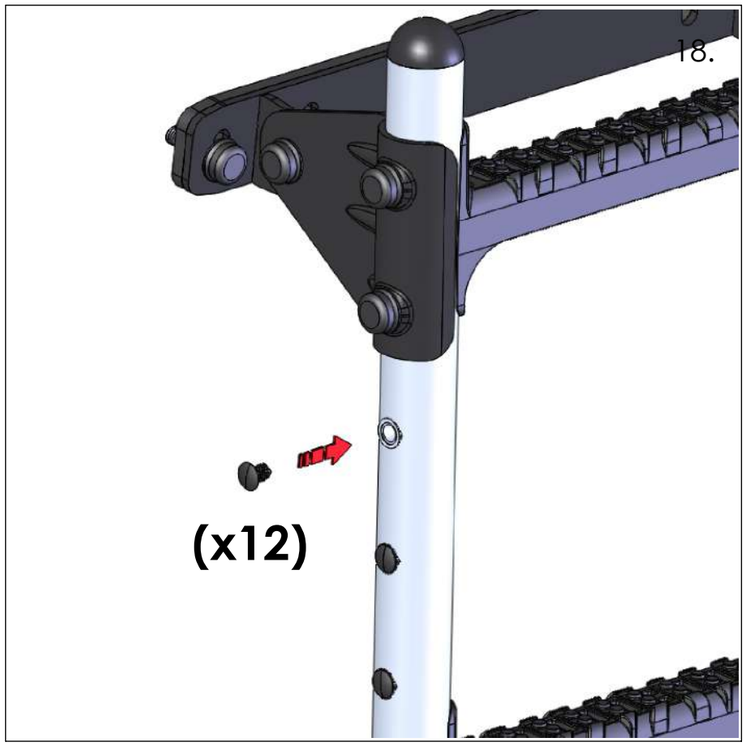
18.
(x12)

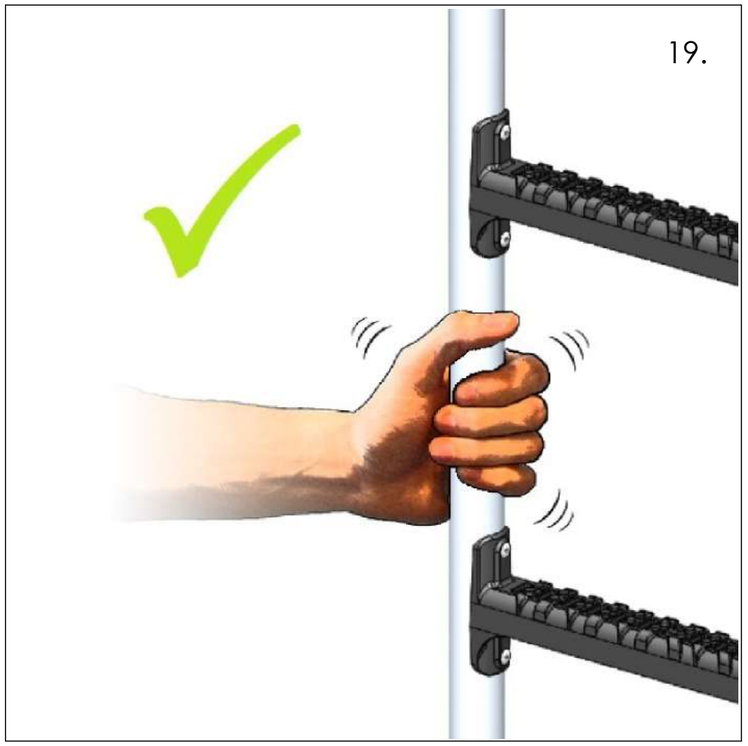
19.